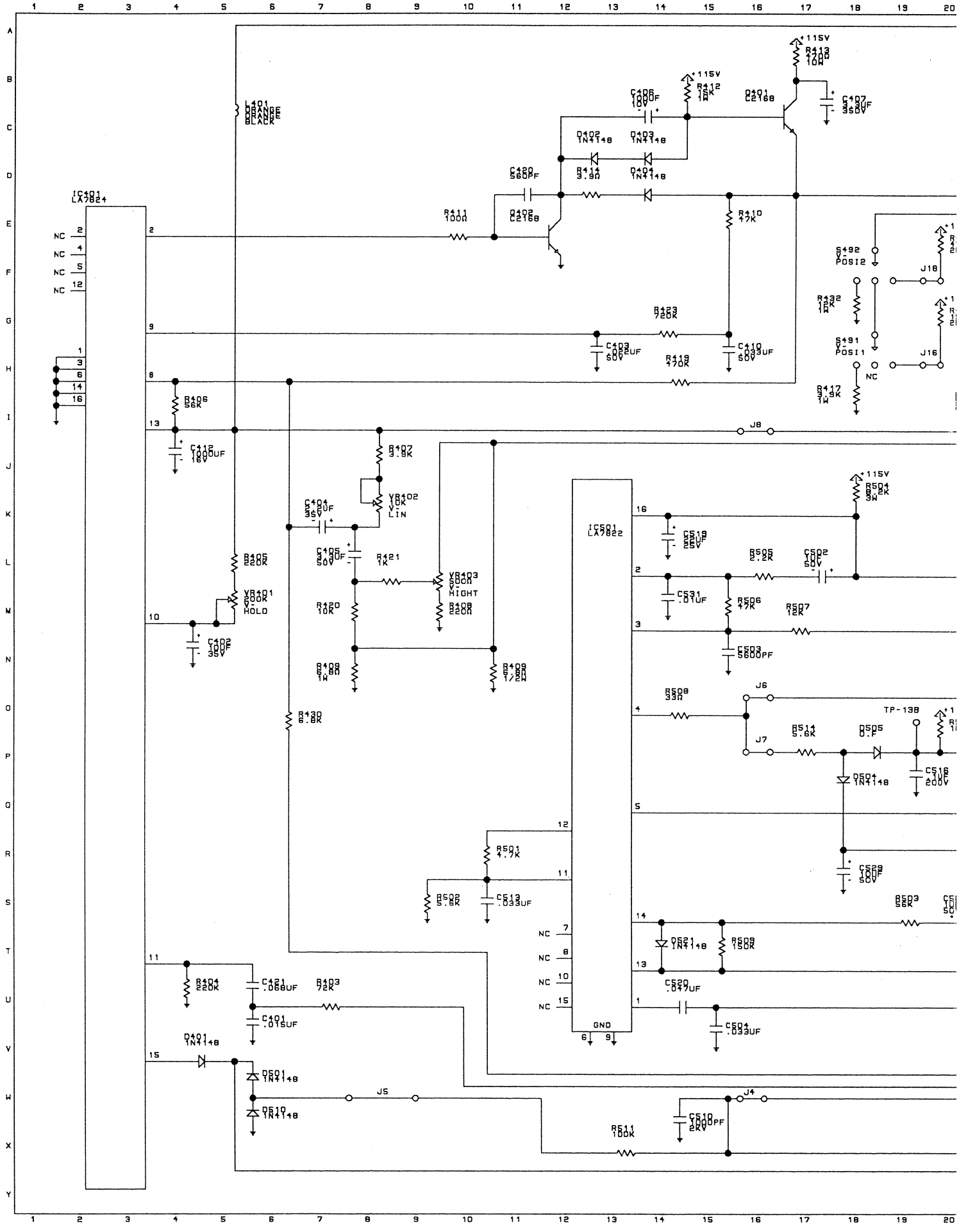

IC401
LA7824
L401
ORANGE
ORANGE
BLACK
+115V
R413
470Ω
10W
C407
3.3UF
350V
Q401
C2168
R412
15K
1W
C406
100UF
10V
D402
1N4148
D403
1N4148
R414
3.9Ω
D404
1N4148
C420
560PF
Q402
C2168
R411
100Ω
R410
47K
R423
720K
C403
.022UF
50V
C410
.033UF
50V
R419
470K
S492
V-
POSI2
J18
R432
15K
1W
S491
V-
POSI1
J16
NC
R417
3.9K
1W
R406
56K
C412
1000UF
16V
J8
R407
3.9K
VR402
10K
V-
LIN
C404
2.2UF
35V
C405
3.3UF
50V
R421
1K
VR403
500Ω
V-
HIGHT
R408
220Ω
R405
220K
VR401
200K
V-
HOLD
C402
10UF
35V
R420
10K
R409
6.8Ω
1W
R409
6.8Ω
1/2W
R430
6.8K
IC501
LA7822
R504
8.2K
3W
C519
22UF
25V
R505
2.2K
C502
10UF
50V
C531
.01UF
R506
47K
R507
12K
C503
5600PF
R508
33Ω
J6
J7
TP-13B
R514
5.6K
D505
0.F
D504
1N4148
C516
1UF
200V
C529
100UF
50V
R501
4.7K
R502
5.6K
C513
.033UF
R503
56K
D521
1N4148
R509
150K
C520
.047UF
C504
.033UF
GND
R404
220K
C421
.068UF
R403
72K
C401
.015UF
D401
1N4148
D501
1N4148
D510
1N4148
J5
J4
C510
1000PF
2KV
R511
100K